TECHNICAL SPECIFICATIONS

Dimensions

Size, construction and adjustments

Electrical specifications

Environmental specifications

DIMENSIONS

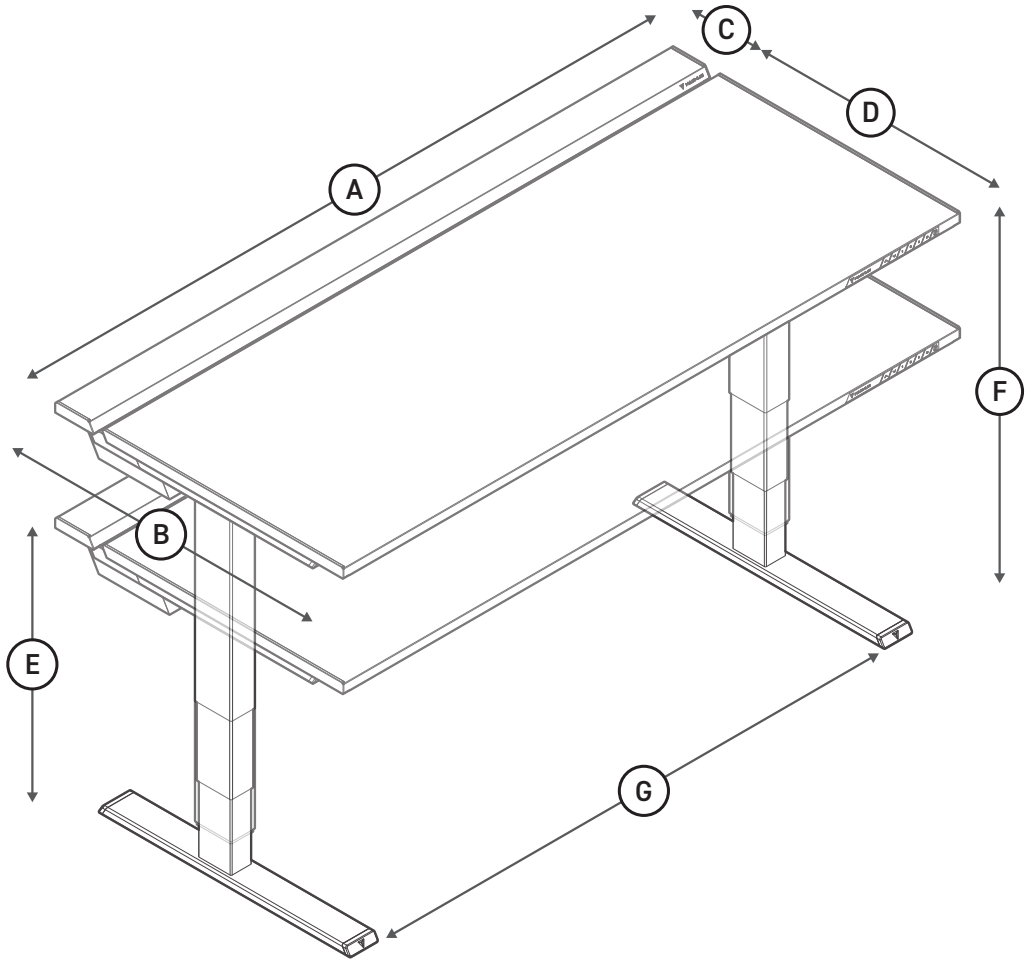

Specification		Secretlab MAGNUS Pro Compact (mm/in)	Secretlab MAGNUS Pro (mm/in)
A	Overall desk top length	1200 / 47.2	1500 / 59.1
B	Overall desk top width	700 / 27.6	700 / 27.6
C	Hinged rear cover width	115 / 4.5	115 / 4.5
D	Front desk top width	585 / 23.0	585 / 23.0
E	Minimum height	650 / 25.6	650 / 25.6
F	Maximum height	1250 / 49.2	1250 / 49.2
G	Inner desk width	920 / 36.2	1229 / 48.4

Specification		Secretlab MAGNUS Pro XL (mm/in)	Secretlab MAGNUS Pro XXL (mm/in)
A	Overall desk top length	1770 / 70.0	1968 / 77.5
B	Overall desk top width	800 / 31.5	800 / 31.5
C	Hinged rear cover width	130 / 5.1	130 / 5.1
D	Front desk top width	670 / 26.4	670 / 26.4
E	Minimum height	650 / 25.6	650 / 25.6
F	Maximum height	1250 / 49.2	1250 / 49.2
G	Inner desk width	1492 / 58.7	1688 / 66.5

SPECIFICATIONS

Size, construction and adjustments

Model:	Secretlab MAGNUS Pro Compact / Secretlab MAGNUS Pro / Secretlab MAGNUS Pro XL / Secretlab MAGNUS Pro XXL
Full desk top dimensions (metric):	1200 x 700 x 20mm / 1500 x 700 x 20mm / 1770 x 800 x 20mm / 1968 x 800 x 20mm (L x W x H)
Full desk top dimensions (imperial):	47.2 x 27.6 x 0.8" / 59.0 x 27.6 x 0.8" / 70.0 x 31.5 x 0.8" / 77.5 x 31.5 x 0.8"
Desk top weight:	20.8kg (45.8lb) / 25.5kg (56.2lb) / 32.9kg (72.5lb) / 36.7kg (80.9lb)
Maximum distributed load capacity:	120kg (265lb)
Height range:	650-1250mm (25.6-49.2")
Frame construction:	Steel
Desk top construction:	MDF with steel
Motor speed (vertical lift):	30mm/s
Noise level:	<50dB
Control panel:	Capacitive touchscreen with 3 preset options
Rated duty cycle:	2 min ON, 18 min OFF

Electrical specifications

Number of motors:	2
Power cord plug types:	Type-B, Type-F, Type-G, Type-I
Power cord length:	3m
Desk input voltage:	100-240V
Control box rating:	100-240V AC, 50-60Hz, 250W
Control box input voltage:	100-240V AC, Max 2.5A
Control box output voltage:	32V, 4A
Control panel input voltage:	5V DC

Type	Region	Maximum input rating	Maximum outlet load
Type-B	US/JP	12A	12A, 1440W
Type-F	DE	12A	2500W
Type-G	UK	12A	2500W
Type-I	AU/NZ	10A	2000W

Environmental specifications

Intended use temperature range:	-20°C to 50°C
Intended use humidity range:	40-80% RH

Secretlab SG Pte Ltd
#05-02 Braddell Road, Singapore 579713

Conforms to UL STD. 962
Certified to CSA STD. C22.2 No. 68

For indoor use only

مطـــــابق
COMPLIANT